HCR500C

HCR500C diesel driven robot is suitable for projects with inconvenient power supply, with flexible mobility, easy to be transported and enter complex spaces for operations. It is the first choice for underground mining, tunnel excavation, emergency rescue, and construction industries, and has good working ability in the field of metal processing.

Widely used in:

- Nuclear accident rescue and nuclear waste treatment
- Mining scaling and break large pieces
- Demolition of subway and buildings
- Metal processing industry

TECHNICAL DATA

Slewing speed	16 s/360°
Transport speed	1.9/3.6 km/h(Slow/Fast)
Incline angle, max.	30°
Hydraulic system capacity	180 L
Pump type	Variable load-sensing
System pressure	18/24 MPa
Pump flow	0-140 L/min
Engine	Inline 4-cylinder water-cooled four stroke diesel engine
Output	61 kW
Fuse	5A/10A/15A According to different routes
Starting device	Direct start
Control type	Portable control box
Signal code	Digital
Transfer	Professional radio/Cable
Range, radio	100 m
Weight of machine excluding attachment	6100 kg
Recommended attachment weight	750 kg

SIZE

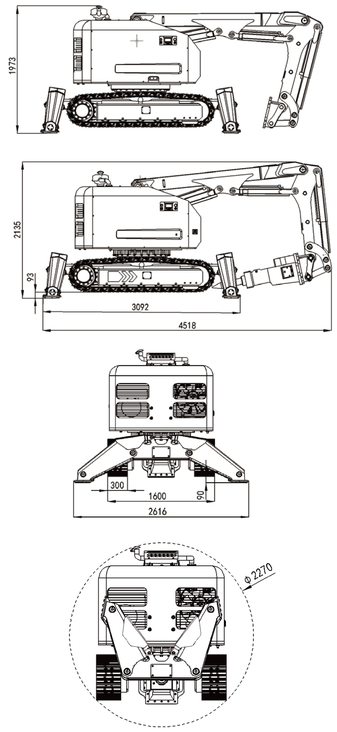

OPTION

- Working attachments such as buckets and hydraulic shears
- Rubber track/steel track
- Mechanical quick coupling
- Forced air cooling
- Oil cylinder special protection
- Hydraulic hammer water jet function
- Backup oil circuit (extra hydraulic function)
- Track steel pads/other chisels
- High temperature hose/nuclear protection
- Hydraulic oil circuit automatic conduction quick coupling/hydraulic wrist
- Remote video system, sensors
- Fire cannon, booster and bulldozer

RANGE
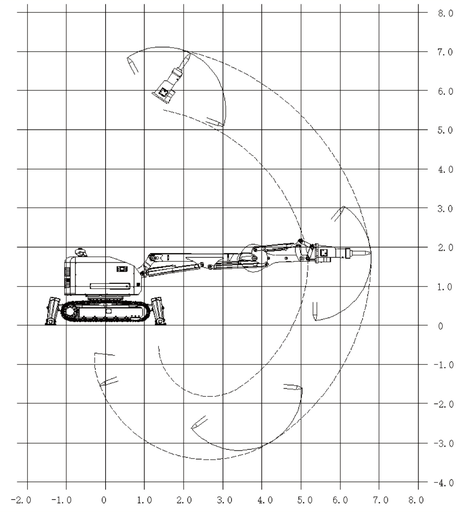
Unit: m