HCR500D

HCR500D has excellent demolition efficiency, high reliability and maintainability. In large-span construction demolition operations, tunnel excavation, metal processing and brick removal, it can further improve work efficiency and save time. With its outstanding power to weight ratio, it can be used for the demolition of large section concrete beams, columns, and high-strength cement floor slabs. In tunnel excavation construction, it has excellent breaking and demolition capabilities.

Widely used in:

- Nuclear industry
- Tunnel excavation
- Construction demolition
- Metal processing industry

TECHNICAL DATA	
Slewing speed	16 s/360°
Transport speed, max.	2.5 km/h
Incline angle, max.	30°
Hydraulic system capacity	185 L
Pump type	Variable load-sensing
System pressure	19/24 MPa
Pump flow	0-140 L/min
Electric motor type	YE3-225S-4-B35
Output	45 kW
Fuse	100A
Starting device	Direct start
Control type	Portable control box
Signal code	Digital
Transfer	Professional radio/Cable
Range, radio	100 m
Weight of machine excluding attachment	6850 kg
Recommended attachment weight	700 kg

SIZE

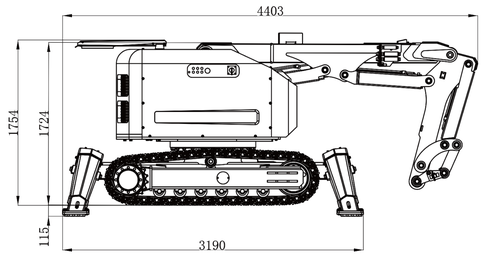

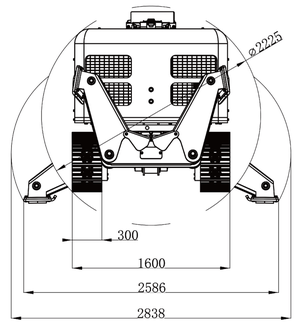

OPTION
Working attachments such as buckets and hydraulic shears
Rubber track/steel track
Mechanical quick coupling
Forced air cooling
Oil cylinder special protection
Hydraulic hammer water jet function
Backup oil circuit (extra hydraulic function)
Track steel pads/other chisels
High temperature hose/nuclear protection
Hydraulic oil circuit automatic conduction quick coupling/hydraulic wrist
Remote video system, sensors
Fire cannon, booster and bulldozer

RANGE
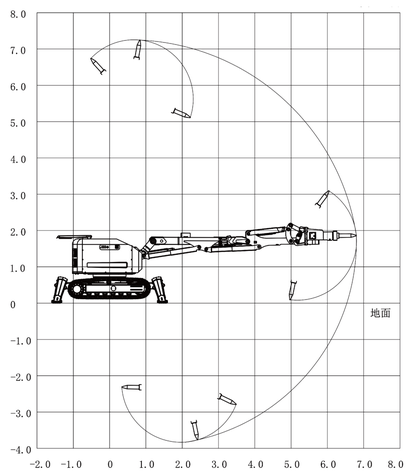
Unit: m