HCR300D

HCR300D has the advantages of excellent technical performance and high reliability, and is a product widely used in industries such as cement, metal processing, tunnel excavation, connecting passages excavation, and quick demolition. Its demolition, slag removal, and crushing capabilities are strong, making it a comprehensive, multi-purpose, and multifunctional demolition robot.

Widely used in:

- Nuclear industry
- Tunnel excavation
- Metal processing industry
- Construction demolition
- Various rotary kilns (cement, limestone, pellets)

TECHNICAL DATA

Slewing speed	16 s/360°
Transport speed, max.	2.5 km/h
Incline angle, max.	30°
Hydraulic system capacity	118 L
Pump type	Variable load-sensing
System pressure	19/23 MPa
Pump flow	0-105 L/min
Electric motor type	YE3-225S-4-B35
Output	37 kW
Fuse	100A
Starting device	Direct start
Control type	Portable control box
Signal code	Digital
Transfer	Professional radio/Cable
Range, radio	100 m
Weight of machine excluding attachment	4650kg
Recommended attachment weight	500 kg

SIZE

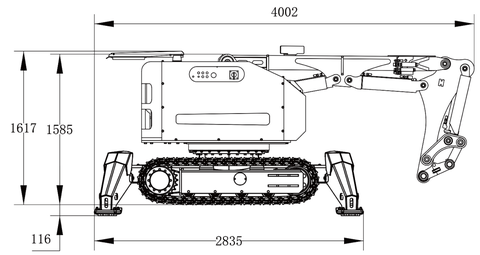

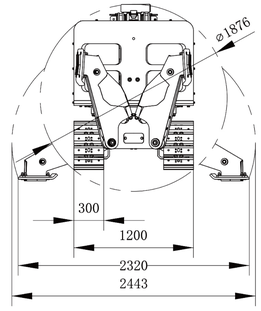

OPTION

- Working attachments such as buckets and hydraulic shears
- Rubber track/steel track
- Mechanical quick coupling
- Forced air cooling
- Oil cylinder special protection
- Hydraulic hammer water jet function
- Backup oil circuit (extra hydraulic function)
- Track steel pads/other chisels
- High temperature hose/nuclear protection
- Hydraulic oil circuit automatic conduction quick coupling/hydraulic wrist
- Remote video system, sensors
- Fire cannon, booster and bulldozer

RANGE
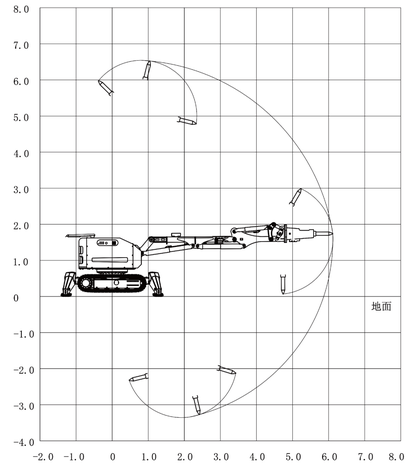
Unit: m