HCR260D

HCR260D has outstanding advantages in the fields of concrete cutting, rotary kiln brick removal, and metal processing. HCR200D has strong crushing ability and is equipped with hydraulic crushers, which can crush thicker beams, columns, and floors. This model of high-performance demolition robot is the first choice for construction and metallurgical furnace maintenance.

Widely used in:

- Nuclear industry
- Tunnel excavation
- Metal processing industry
- Construction demolition
- Various rotary kilns (cement, limestone, pellets)

TECHNICAL DATA

Slewing speed	16 s/360°
Transport speed, max.	2.5 km/h
Incline angle, max.	30°
Hydraulic system capacity	95 L
Pump type	Variable load-sensing
System pressure	19/23 MPa
Pump flow	0-83 L/min
Electric motor type	YE3-200L-4B35
Output	30 kW
Fuse	100A
Starting device	Direct start
Control type	Portable control box
Signal code	Digital
Transfer	Professional radio/Cable
Range, radio	100 m
Weight of machine excluding attachment	4280kg
Recommended attachment weight	350 kg

SIZE

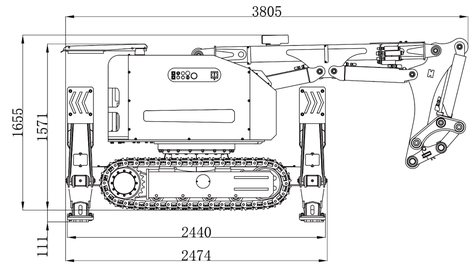

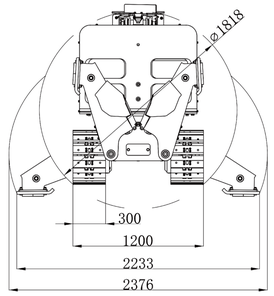

OPTION

- Working attachments such as buckets and hydraulic shears
- Rubber track/steel track
- Mechanical quick coupling
- Forced air cooling
- Oil cylinder special protection
- Hydraulic hammer water jet function
- Backup oil circuit (extra hydraulic function)
- Track steel pads/other chisels
- High temperature hose/nuclear protection
- Hydraulic oil circuit automatic conduction quick coupling/hydraulic wrist
- Remote video system, sensors
- Fire cannon, booster and bulldozer

RANGE
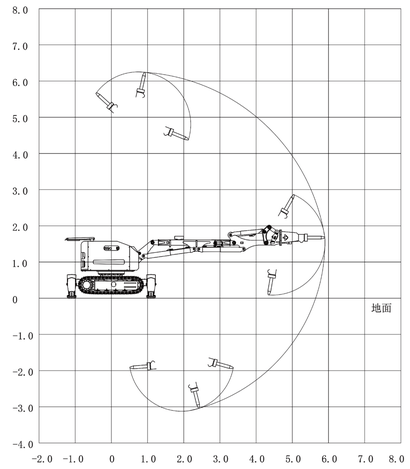
Unit: m