HCR200D

HCR200D has outstanding advantages in the fields of concrete cutting, rotary kiln brick removal, and metal processing. HCR200D has strong crushing ability and is equipped with hydraulic crushers, which can crush thicker beams, columns, and floors. This model of high-performance demolition robot is the first choice for construction and metallurgical furnace maintenance.

Widely used in:

- Nuclear industry
- Tunnel excavation
- Metal processing industry
- Construction demolition
- Various rotary kilns (cement, limestone, pellets)

TECHNICAL DATA	
Slewing speed	12 s/360°
Transport speed, max.	2.5 km/h
Incline angle, max.	30°
Hydraulic system capacity	85 L
Pump type	Variable load-sensing
System pressure	18/24 MPa
Pump flow	0-90 L/min
Electric motor type	YE3-200L-4B35
Output	30 kW
Fuse	63A
Starting device	Direct start
Control type	Portable control box
Signal code	Digital
Transfer	Professional radio/Cable
Range, radio	100 m
Weight of machine excluding attachment	3230 kg
Recommended attachment weight	350 kg

SIZE

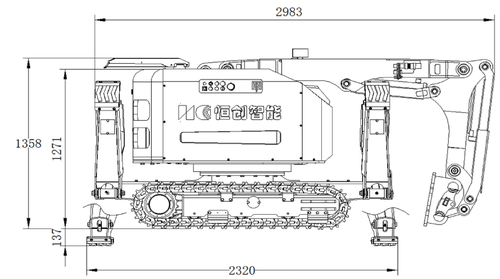

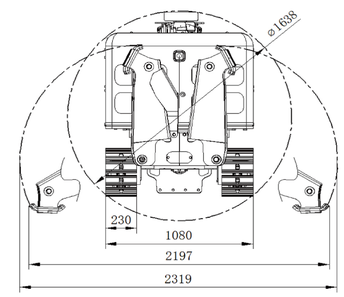

OPTION

- Working attachments such as buckets and hydraulic shears
- Rubber track/steel track
- Mechanical quick coupling
- Forced air cooling
- Oil cylinder special protection
- Hydraulic hammer water jet function
- Backup oil circuit (extra hydraulic function)
- Track steel pads/other chisels
- High temperature hose/nuclear protection
- Hydraulic oil circuit automatic conduction quick coupling/hydraulic wrist
- Remote video system, sensors
- Fire cannon, booster and bulldozer

RANGE
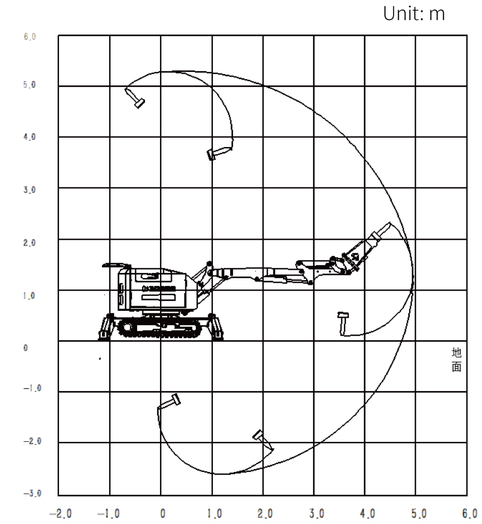
Unit: m