HCR170D

HCR170D is compact, small size, lightweight and has excellent crushing ability, widely used in the construction and metal processing industries. It can enter narrow doorways and metallurgical furnace mouth to efficiently complete demolition operations. Its main features are compact machine, high force, and precise demolition. Precise remote control technology keeps operators away from dangerous areas, and robots replace manual work, greatly improving the speed of demolition.

Widely used in:

- Nuclear industry
- Construction demolition
- Rotary kilns maintenance
- Metallurgical furnace maintenance
- Mining and tunneling construction

TECHNICAL DATA

Slewing speed	12 s/360°
Transport speed, max.	2.5 km/h
Incline angle, max.	30°
Hydraulic system capacity	80 L
Pump type	Variable load-sensing
System pressure	19/24 MPa
Pump flow	0-60 L/min
Electric motor type	YE3-180L-4B35
Output	22 kW
Fuse	63A
Starting device	Direct start
Control type	Portable control box
Signal code	Digital
Transfer	Professional radio/Cable
Range, radio	100 m
Weight of machine excluding attachment	2570 kg
Recommended attachment weight	270 kg

SIZE

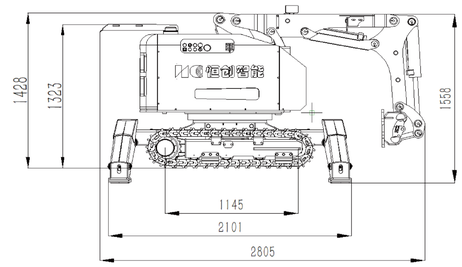

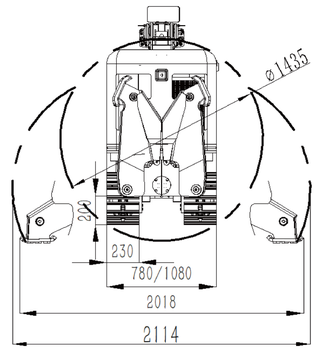

OPTION

- Working attachments such as buckets and hydraulic shears
- Rubber track/steel track
- Mechanical quick coupling
- Forced air cooling
- Oil cylinder special protection
- Hydraulic hammer water jet function
- Backup oil circuit (extra hydraulic function)
- Track steel pads/other chisels
- High temperature hose/nuclear protection
- Hydraulic oil circuit automatic conduction quick coupling/hydraulic wrist
- Remote video system, sensors
- Fire cannon, booster and bulldozer

RANGE
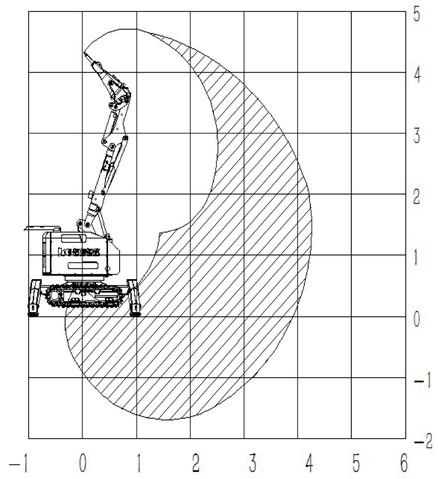
Unit: m