HCR120C

HCR120C is the smallest diesel engine driven demolition robot, and its compact design and maneuverability make it suitable for many projects. It can be accessed through ordinary porches and narrow passages, with maneuverability and flexibility, without dragging cables, and has great load-bearing capacity and strong obstacle crossing ability. It can climb stairs or 30° slopes.

Widely used in:

- Metallurgical furnace maintenance and slag removal
- Emergency rescue
- Nuclear accident rescue and nuclear waste treatment
- Demolition and renovation of commercial and industrial buildings

TECHNICAL DATA

Slewing speed	12 s/360°
Transport speed	2.2/4.0 km/h(Slow/Fast)
Incline angle, max.	30°
Hydraulic system capacity	40 L
Pump type	Variable load-sensing
System pressure	19 MPa
Pump flow	0-50 L/min
Engine	Inline 3-cylinder water-cooled four stroke diesel engine
Output	18.4 kW
Fuse	16A/32A According to different routes
Starting device	Direct start
Control type	Portable control box
Signal code	Digital
Transfer	Professional radio/Cable
Range, radio	100 m
Weight of machine excluding attachment	1500 kg
Recommended attachment weight	160 kg

SIZE

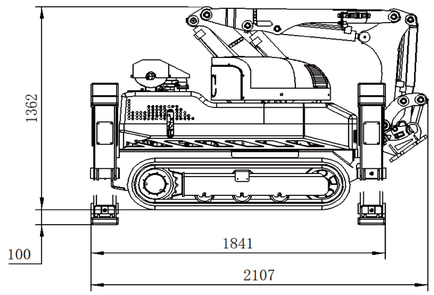

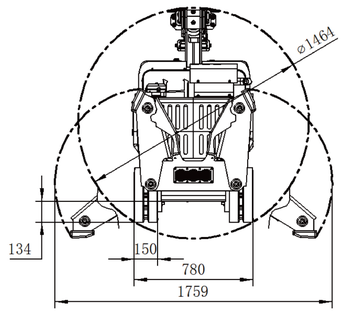

OPTION

- Working attachments such as buckets and hydraulic shears
- Rubber track/steel track
- Mechanical quick coupling
- Forced air cooling
- Oil cylinder special protection
- Hydraulic hammer water jet function
- Backup oil circuit (extra hydraulic function)
- Track steel pads/other chisels
- High temperature hose/nuclear protection
- Hydraulic oil circuit automatic conduction quick coupling/hydraulic wrist
- Remote video system, sensors
- Fire cannon, booster and bulldozer
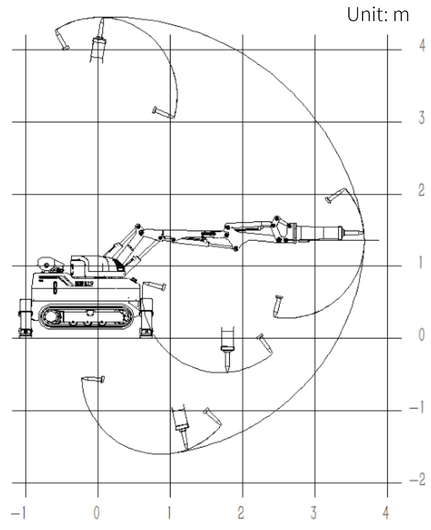
RANGE