HCR120D

HCR120D is an engineering robot driven by a motor, which is energy-saving and environmentally friendly. Its compact design and maneuverability can be applied to many projects. It can be accessed through ordinary porches and narrow passages, with maneuverability, high load-bearing capacity, and strong obstacle crossing ability. It can climb stairs or 30° slopes, suitable for small spaces.

Widely used in:

- Metallurgical furnace maintenance and slag removal
- Emergency rescue
- Nuclear accident rescue and nuclear waste treatment
- Demolition and renovation of commercial and industrial buildings

TECHNICAL DATA	
Slewing speed	12 s/360°
Transport speed, max.	2.5 km/h
Incline angle, max.	30°
Hydraulic system capacity	40 L
Pump type	Variable load-sensing
System pressure	18 MPa
Pump flow	0-60 L/min
Electric motor type	YYB180M
Output	18.5 kW
Fuse	32A
Starting device	Direct start
Control type	Portable control box
Signal code	Digital
Transfer	Professional radio/Cable
Range, radio	100 m
Weight of machine excluding attachment	1650 kg
Recommended attachment weight	160 kg

SIZE

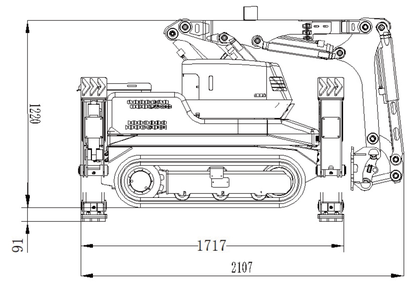

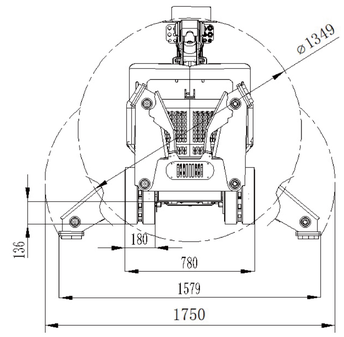

OPTION
Working attachments such as buckets and hydraulic shears
Rubber track/steel track
Mechanical quick coupling
Forced air cooling
Oil cylinder special protection
Hydraulic hammer water jet function
Backup oil circuit (extra hydraulic function)
Track steel pads/other chisels
High temperature hose/nuclear protection
Hydraulic oil circuit automatic conduction quick coupling/hydraulic wrist
Remote video system, sensors
Fire cannon, booster and bulldozer

RANGE
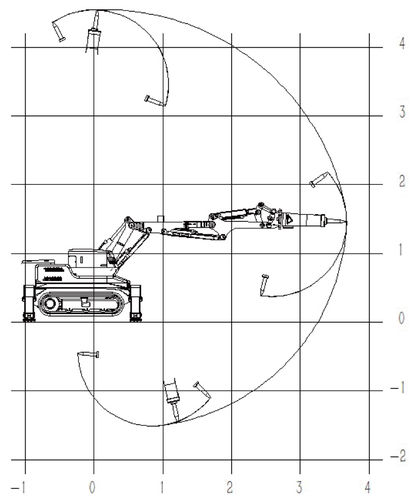
Unit: m