HCR70D

HCR7OD is the smallest demolition robot that can pass through narrow doorways and be transported by a universal passenger elevator to enter narrow spaces for demolition work. Electric driven, flexible walking, low noise, and no emissions. It can replace human in hazardous and harsh environments such as toxic (pollution), flammable, explosive, prone to collapse, strong radiation, etc. for comprehensive and remote control of crushing, shearing, demolition and other operations.

Widely used in:

- Emergency rescue
- Buildings interior renovation and demolition
- Metallurgical furnace maintenance and slag removal
- Nuclear accident rescue and nuclear waste treatment

TECHNICAL DATA

Slewing speed	7 s/240°
Transport speed, max.	2.4 km/h
Incline angle, max.	30°
Hydraulic system capacity	27 L
Pump type	Variable load-sensing
System pressure	18 MPa
Pump flow	0-27 L/min
Electric motor type	YE3-132M-B5
Output	7.5 kW
Fuse	16A
Starting device	Direct start
Control type	Portable control box
Signal code	Digital
Transfer	Professional radio/Cable
Range, radio	100 m
Weight of machine excluding attachment	900kg
Recommended attachment weight	105 kg

SIZE

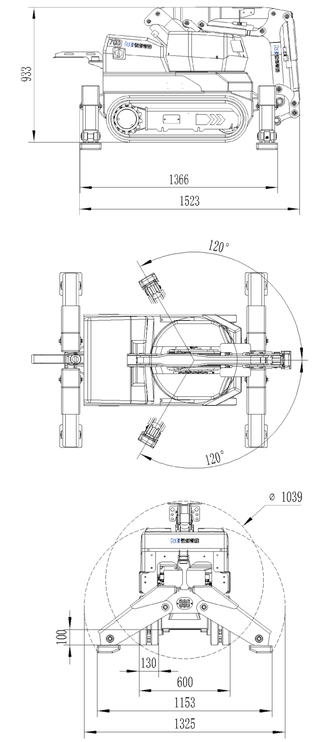

OPTION

- Working attachments such as buckets and hydraulic shears
- Rubber track/steel track
- Mechanical quick coupling
- Forced air cooling
- Oil cylinder special protection
- Hydraulic hammer water jet function
- Backup oil circuit (extra hydraulic function)
- Track steel pads/other chisels
- High temperature hose/nuclear protection
- Hydraulic oil circuit automatic conduction quick coupling/hydraulic wrist
- Remote video system, sensors
- Fire cannon, booster and bulldozer
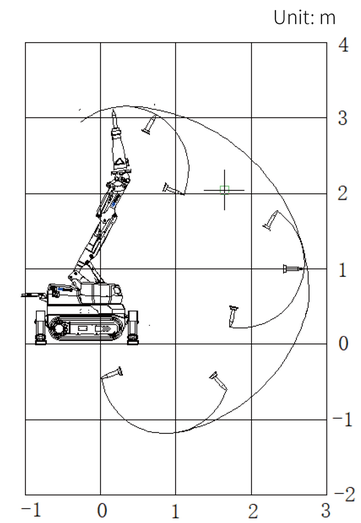
RANGE